EN

UCS600
UCS900

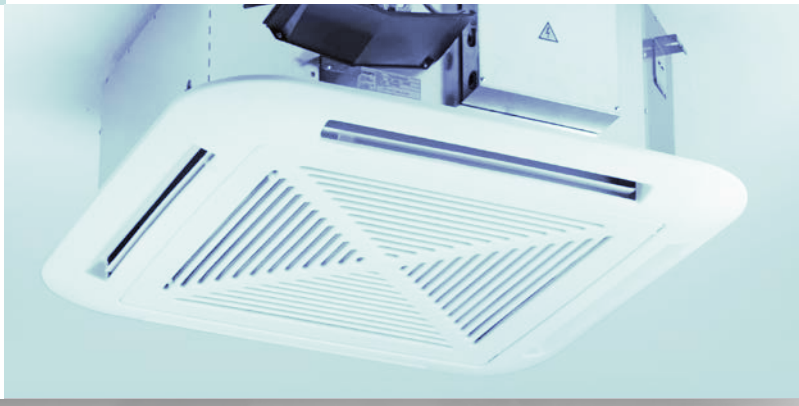

EURAPO

INTEGRATED
COMFORT
SYSTEMS

SETTING UP CORRECT TECHNOLOGIES FOR THE AIR CIRCULATION

Among the leading causes of discomfort in an air conditioned environment we can detected:

- too high air flow, generating drafts;
- uneven distribution of the incoming air volume;
- non homogeneous temperature distribution in the room.

To avoid these drawbacks, it is necessary to generate **a proper diffusion of the air**, which guarantees the right temperature, relative humidity, speed and purity corresponding to the environmental comfort desired.
The **Eurapo UCS cassette units** are able to give a balanced response to all these needs: the outlet air is spread like a classic four-way ceiling diffuser, with distribution from two to four orthogonal directions.
This system takes full advantage of the **Coanda effect**, greatly reducing the air flow direct to people, with positive consequences for their comfort.

THE COANDA EFFECT: THE PERFECT ALLY FOR A SOFT AIR DIFFUSION

When the air is diffused in contact with a flat surface such as a dropped ceiling, it determines a depression between the flow and the surface, which causes the tendency of the fluid to adhere to the surface avoiding its immediate dropping below. This phenomenon, known as the **Coanda effect**, is of great interest for the correct diffusion of cold air.
For this reason, Eurapo has developed solutions that maximize the **Coanda effect**, by using small quantities of air but at the fastest possible speed and with the widest air throw.

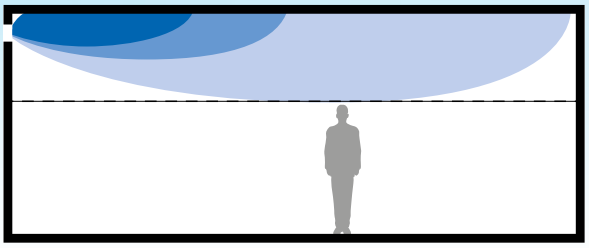

Fig. 1 - Air throw with Coanda effect in cooling mode

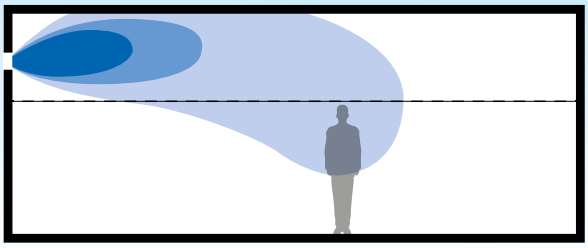

Fig. 2 - Air throw without Coanda effect in cooling mode

INDUSTRIAL PARTNERSHIP WITH THE UNIVERSITY OF UDINE: THE IMPORTANCE OF R&D

Eurapo has involved the **University of Udine** in an industrial research project on the UCS600 cassette units. As a result, it was found that the UCS600 cassette has a much more homogeneous air distribution than other similar products available on the market, as determined be previous tests of all units in the Eurapo laboratories. This result is closely connected to the **considerable wide air throw in transverse direction**, with a consequent beneficial effect on the uniform temperature distribution and more generally on the room comfort.

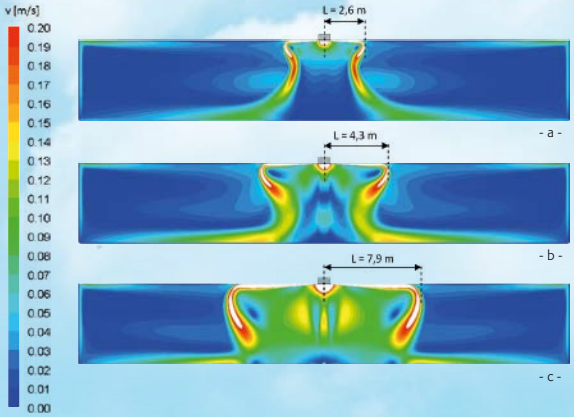

Fig. 3 UCS600: Distribution of air speed [m/s] in summer mode, on a vertical plane that divides the room in two parts, at MIN (a), MED (b) and MAX (c) speed.

Fig. 3a UCS600: Distribution of air temperature [° C] in summer mode, on a vertical plane that divides the room in two parts, at MIN (a), MED (b) and MAX (c) speed.

Figures 3 and 3a show, in a summer scenario, the extreme uniform temperature distribution in the area occupied by people.

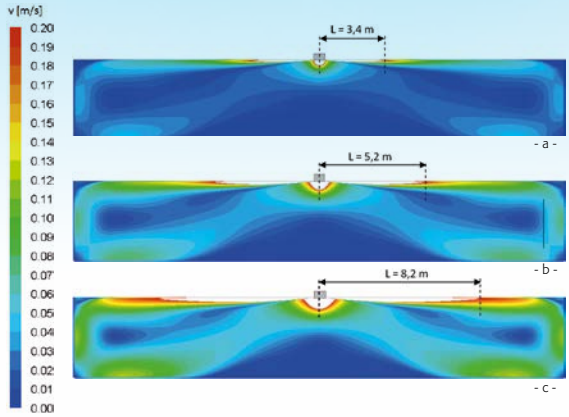

Fig. 4 UCS600: Distribution of air speed [m/s] in winter mode, on a vertical plane that divides the room in two parts, at MIN (a), MED (b) and MAX (c) speed.

Fig. 4a UCS600: Distribution of air temperature [° C] in winter mode, on a vertical plane that divides the room in two parts, at MIN (a), MED (b) and MAX (c) speed.

Even in wintertime, the Eurapo UCS600 cassette ensures a homogeneous distribution of the temperature, assuring the greatest comfort in the room. The temperature in the occupied area remains always in a very narrow range around the set-point value (typically 20 °C), with a percentage of dissatisfied persons (PPD) well below the threshold of 10%, considered acceptable by the regulations for rooms used as offices (UNI EN ISO 7730).

UCS

UCS600

CASSETTE FANCOIL

Cassette fancoil,
for heating and cooling mode,
2 and 4 pipe systems, capacity from 1,39 kW to 4,75 kW.

EURAPO has designed a new range of hydronic cassette units thanks to the recent investments in the new technical laboratories. The new **UCS600** series has been planned in accordance with quality standards that characterize the complete EURAPO production since years and it is distinguished by an increased capacity with a low noise level, by a further improvement in the quality of the components, by a new design of the air intake/air supply grilles that also improves air distribution. **Power consumption is reduced** by more than **50%** in the EST version and thanks to the new production process, UCS600 can deeply penetrate the market with **extremely** aggressive and **competitive prices**.

The UCS600 cassette units are available in 6 asynchronous models and in 4 EST models, for 2 and 4 pipe systems; their external dimensions allow easy installation in modular dropped ceilings (600x600), while the hydraulic and electrical connections, located on the same side, facilitate the maintenance operations. The unit in basic configuration is equipped with a condensate pump, and it is pre-arranged for the connection to an additional air outlet duct and/or to an external air intake. The air intake/outlet grilles are designed in order to avoid that people are directly invested by the air flow (thanks to the Coanda effect), by reaching the maximum levels of comfort. Among the wide range of accessories available for the UCS600 units it is possible to find the **"4-Pipe Compact Kit"**, a particular 3-way valve kit that permits to obtain a 4 pipe system from a single water coil, greatly increasing the capacity of the "heating coil".

UCS/M 600

Cassette fancoil,
for heating and cooling mode,
for 2 and 4 pipe system, capacity from 1,39 kW to 4,75 kW.

The **UCS/M 600** presents all the new features of the basic model UCS600 and is characterized by the micro-drilled air intake grill and its air diffusion frame entirely realized in painted metal sheet, perfectly adaptable to modular false ceilings.

Similarly to the standard UCS600 models, the metallic grill has been designed to obtain the **Coanda effect**, that guarantees an uniform and pleasant air diffusion, by avoiding that people are directly invested by outgoing air flow.
The UCS/M 600 is not provided with air outlet flaps for the deviation of the air flow, therefore the air diffusion is homogeneous on all the four sides of the cassette.

The micro-drilled air intake grill is perfectly integrated in the outer frame, which contains the air filter, easily accessible to make the cleaning operation extremely comfortable.

UCS

UCS/H 600

CASSETTE FANCOIL

Cassette fancoil without condensate pump,
for heating and cooling mode,
2 and 4 pipe systems, capacity from 1,39 kW to 4,75 kW.

UCS/H 600 cassette unit has been designed to allow a natural condensate water discharge, for gravity; in this way, condensate pump is not necessary.
UCS/H 600 unit is particularly indicated when reduced maintenance operations are required, for safety or sanitary locations (banks, police stations, hospitals, sanitary rooms), or if very low sound levels are tolerated.
Similarly to the standard UCS600 models, the grill has been designed to obtain the Coanda effect, that guarantees an uniform and pleasant air diffusion, avoiding that people are directly invested by outgoing air flow.
The absence of the condensate pump allows a **greater silence**, reduced electric consumptions and limited maintenance operations.
The accessories range has been implemented with the new **"antiallergic" F7 filter, with a very high filtration capacity, which ensures purification and air quality improvement by filtering pollen particles and powders having dimensions less than 10 microns.** The F7 filter can be combined with a **pressure switch** that highlights the filter clogging, warning of the need to replace the filter, in order to keep its characteristics unchanged and to avoid to affect the air flow of the unit.

UCS900

Cassette fancoil 900x900,
for heating and cooling mode,
2 and 4 pipe system, capacity from 3,90 kW to 10,15 kW.

With an innovative, essential and clean design, which fits in every kind of environment, the **UCS900** water cassette unit is the result of the stylist research to present an innovative product in terms of performance, low sound level, comfort and regulation flexibility.
The aesthetics of this unit is accurate in every detail, planned in accordance with the EURAPO experience, appreciated by architects and designers from all over the world.
The UCS900 water cassette unit can be used for heating and cooling applications; it has been designed to fit into modular or not modular false ceilings, in 2 and 4 pipe systems.
The 900x900mm dimension of the cassette unit permits to satisfy the cooling demand of ambient having quite big volumes. The UCS900 units in basic configuration are equipped with a condensate pump and they are pre-arranged for the connection to an additional air outlet duct and/or to an external air intake, by using the specific collars, supplied as standard in a kit.
The particular shape of the air outlet plenum is designed specifically in order to obtain the **Coanda effect**, a phenomenon for which the air outlet flow tends to adhere to the ceiling and falls down smoothly, without blowing directly towards people in the room: the optimal solution for an uniform and pleasant air diffusion.
The UCS900 cassette unit can be managed by the complete range of EURAPO regulators: from the standard electro-mechanical and microprocessor controls to the digital controls, compatible to BMS Systems.

OMNIBUS

OMNIBUS

BUILDING MANAGEMENT SYSTEM

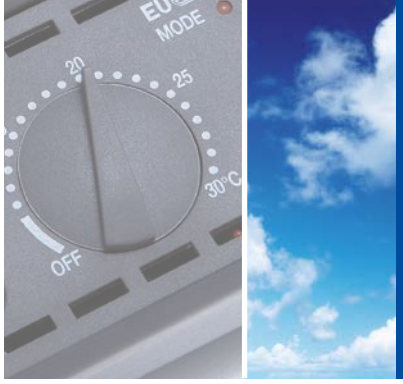

Yet designing and producing air conditioning systems comprising selected, reliable components is not sufficient in itself to guarantee high standards of air-conditioned comfort, these also need to be integrated and harmonised with the **intelligence controlling them**.
Only complete synergy between **terminal unit performance** and **regulating devices** can guarantee optimum results and meet the most modern requirements in comfort management simply and efficiently.

The **EURAPO-OMNIBUS** Digital System is designed to fully regulate the water terminal units (such as fan coil units, water cassette units, high pressure ducted fan coil units and radiant systems) for domestic use, residential buildings, public rooms.
This controller permits to be easily programmed by the installing company and configured accordingly to each particular type of system.

- Elegant design
- LCD Display
- Touch screen
- Humidity sensor
- Plug & Play connections
- Weekly, daily and monthly programs
- Scenarios configuration
- Compatible with brushless and inverter technology
- Flexible configuration
- Service tool available
- MODBUS RTU: free protocol
- ETHERNET (TCP/IP) compatibility
- LONWORKS® compatibility
- Different access levels to the Building Management System

OTOUCH

INNOVATIVE TOUCH SCREEN DEVICE

OTOUCH is a control and supervision system developed by Eurapo in order to manage residential comfort. This high tech solution is matched with an easy-to-use graphical interface which has been designed in co-operation with Udine University in order to guarantee an intuitive and simple comfort control.

OTOUCH can functionally fully control air conditioning system devices (such as fan coils units) or radiant systems (such as hydraulic actuators or dehumidifiers) or even both at the same time, following an innovative idea of control philosophy. Its distinctive feature consists of being able to monitorize and control all functions of fan coils units toghether with the capability of interacting and integrating different HVAC system devices in the same control panel.

OTOUCH can control:

- Cooling and heating units (chillers/boilers)
- HVAC system pumps
- Mixing valves (for radiant systems)
- Thermal zone valves
- Dehumidifiers
- Fan coil units

UCS600

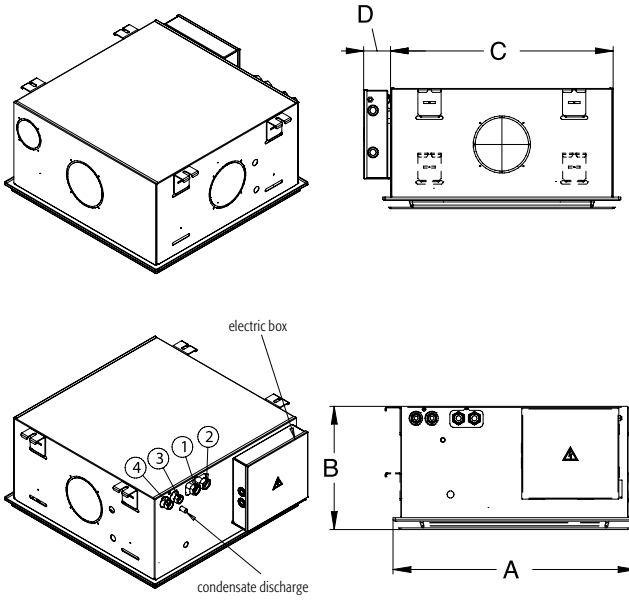

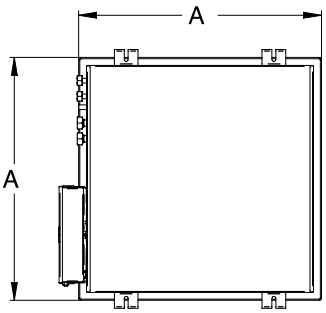

2 pipes installation		
1	Water inlet	3/4" F
2	Water outlet	3/4" F

4 pipes installation		
1	Cooling water inlet	3/4" F
2	Cooling water outlet	3/4" F
3	Heating water inlet	1/2" F
4	Heating water outlet	1/2" F

Dimensions (mm) and weights for UCS600	
A	615
B	328
C	575
D	75
Kg	24÷25,6

UCS/M 600

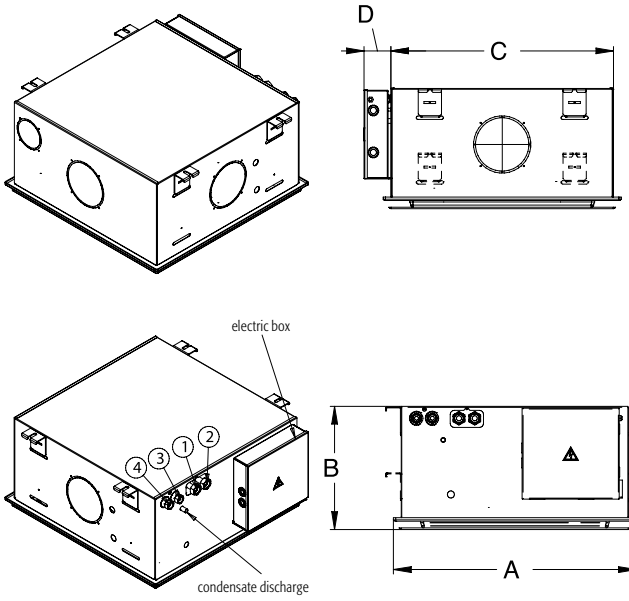

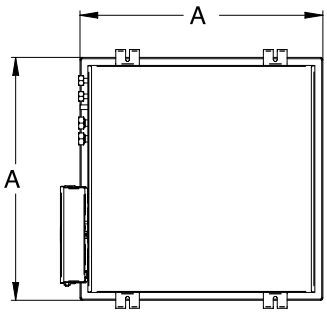

2 pipes installation		
1	Water inlet	3/4" F
2	Water outlet	3/4" F

4 pipes installation		
1	Cooling water inlet	3/4" F
2	Cooling water outlet	3/4" F
3	Heating water inlet	1/2" F
4	Heating water outlet	1/2" F

Dimensions (mm) and weights for UCS/M 600	
A	615
B	328
C	575
D	75
Kg	26÷27,6

UCS/H 600

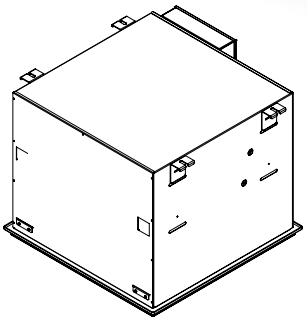

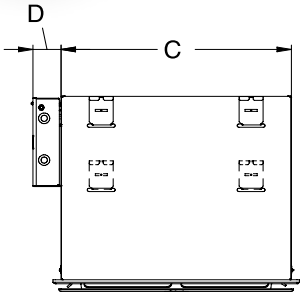

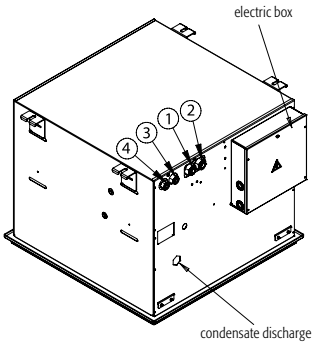

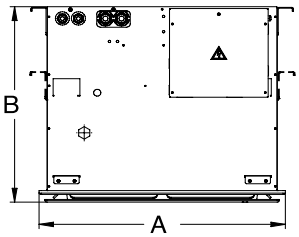

	2 pipes installation	
1	Water inlet	3/4" F
2	Water outlet	3/4" F
	4 pipes installation	
1	Cooling water inlet	3/4" F
2	Cooling water outlet	3/4" F
3	Heating water inlet	1/2" F
4	Heating water outlet	1/2" F

Dimensions (mm) and weights for UCS/H 600	
A	615
B	525
C	575
D	75
Kg	33,1÷34,7

UCS900

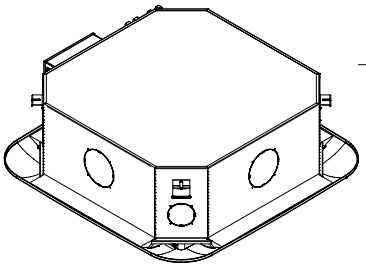

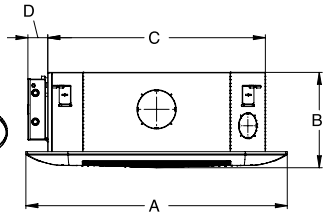

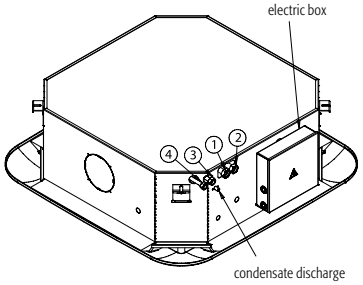

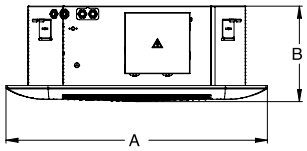

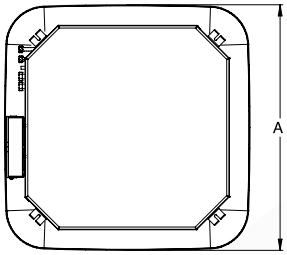

	2 pipes installation	
1	Water inlet	3/4" F
2	Water outlet	3/4" F
	4 pipes installation	
1	Cooling water inlet	3/4" F
2	Cooling water outlet	3/4" F
3	Heating water inlet	1/2" F
4	Heating water outlet	1/2" F

Dimensions (mm) and weights for UCS900	
A	985
B	360
C	820
D	75
Kg	45

GENERAL FEATURES UCS600 AND UCS900

The **main structure** is made of galvanised steel, completely insulated inside with closed cell thermal insulation material.
On three of the four sides, there are prearranged holes for the connection to an air supply duct. Furthermore, there is a prearranged hole for the connection to an external air intake.
The relevant collars for an easy connection to the air duct are always supplied as standard.

The finned 3 row **heat exchangers for UCS600** are made of copper pipes and surface treated aluminium fins.
The surface treatment on the fins permits to have a better condensing water discharge from the fins themselves and a perfect air passage through the heat exchanger, with reduced pressure drops and a high dehumidification and efficiency of the coil.
2 and 3 row coils are available (for UCS900 only 3 row coils). Water connections have diameter ¾" G female on the cooling coil and diameter ½" G female on the heating coil (4 pipe system).

The **fan deck**, installed in central position, is composed by a centrifugal fan and plastic impeller.
The electric motor is single phase and is provided with six speeds, three of them are factory wired as standard. In the EST version, the motor is equipped with an integrated inverter and it is managed by a modulating signal 0-10Vdc.

The **electric panel** (QEC00) consists of a galvanized metal box, which contains the terminal board for the electrical connections, the earth protection terminal, the autotransformer and the capacitor (in the asynchronous version). The electric panel is located on the side of the unit, at the same side of the water connections.

UCS600 EURAPO Cassette units (except UCS/H) are supplied with a built-in **condensate pump** having a no-return valve on the outlet. The pump is activated by a floating switch and a second switch is used for closing the cooling valve in case of too high water level in the condensate tray, due to some problems in the water evacuation system.

The **air filter** is composed by a metal frame on which a polypropylene fibre is fixed. It can be easily removed thanks to two textile tongues fixed on its frame.
The filter is immediately accessible by removing the external air intake grill.

The **air intake grill** is realized in heat-resistant ABS plastic material*, white colour, with a very discreet design, covering the air outlet flaps.
This particular combination of air intake and air outlet grilles avoids having direct air flow against the people in the room.
A perfect internal insulation with closed-cell insulating material guarantees not to have problems of water condensation on the grilles.

The **air outlet plenum** is made by heat-resistant ABS plastic material* in white colour. It permits to distribute the air on the 4 sides of the unit.
On each side of the cassette unit there are white flaps which can be totally closed on one or two (max.) sides of the unit, particularly used in case of an air discharge into an adjacent room.
Two levers fix the grill to one side of the air supply plenum; this permits, thanks to a hinge system, to facilitate maintenance operations, as the grill remains hooked to the plenum itself.

** For UCS/M model, the micro-drilled intake grill and the diffusion frame are made in painted metal sheet.*

ACCESSORIES

Electric heater

Stainless steel 1,5 kW (UCS600) or 3 kW (UCS900) electric heater supplied with 2 safety thermostats, one with automatic resetting and the other one with manual resetting and a power relay card (QEC20). When the electric heater is installed, the cassette unit is internally insulated with heat resistant insulating material.

F7 filter with pressure switch (UCS/H 600)

Air filter with filtration grade **F7**. It consists of a plastic frame (ABS V0) and a fiberglass filtering media with M1 self-extinguishing class. It can be combined with a pressure switch that highlights with an alarm any anomalies that cause a variation of pressure.

Valves and shut-off valves Four-pipe Compact Kit

2 or 3 way valves, factory fitted, 230V or 24V, with ON-OFF or modulating actuator. The standard kit is composed by the auxiliary drain pan and by shut-off ball valves, supplied loose. The **Four-pipe Compact** kit is a special 3-way valve kit that permits to obtain a four-pipe system by using only one water coil.

EXTRA RAL

Special painting colour of the grill, available in all RAL range.

CONTROLS

CMR00

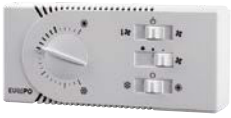

Remote room temperature thermostat, suitable for the selection of the main functions of the unit: type of ventilation, fan speed selection, Summer/Winter switch and room temperature control.

EDCR

Remote microprocessor control, for "on wall" installation, designed for water terminal units equipped with Brushless motors (EST Inverter Technology).

ONU11/OBU11 OC514

Omnibus card + Infrared receiver
Infrared receiver built-in the suction grill.
It is possible to regulate the Cassette unit through the remote control (OIR30).

OIR30

Infrared remote control
LCD display for the visualisation of the main working parameters.
Buttons for setting the main working parameters (Fan speed, Fan mode, Setpoint , etc.).

OC736/ODC736

Analogue Plus Console
Elegant and simple console for the setting of the temperature set point, the functioning of the fancoil unit, the S/W changeover and the speed selection.
Compatible with the Supervision System.

OC236/ODC236

Display Console
An elegant device that permits to set all working parameters (set point, speed, status, etc.).
It can also be used as diagnosis instrument, thanks to the parameters visualisation and modification.
Compatible with the Supervision System.

TECHNICAL DATA UCS600, UCS/M 600, UCS/H 600 and UCS900

TECHNICAL DATA (EST)

EST INVERTER
ENERGY SAVING TECHNOLOGY

				2 pipes			4 pipes		
				621	622	922	641	642	942
Cooling	Air temperature 27 °C d.b., 19 °C w.b. Water temperature 7/12 °C	Total cooling capacity [kW]	MAX	2,87	4,89	9,72	1,90	3,99	9,00
			MED	2,38	3,66	7,14	1,69	3,10	6,84
			MIN	1,64	2,56	4,25	1,23	2,28	3,53
		Sensible cooling capacity [kW]	MAX	2,45	3,83	7,42	1,76	3,37	6,85
			MED	1,95	2,71	5,33	1,53	2,51	4,89
			MIN	1,27	1,85	3,15	1,08	1,74	2,58
		Water flow [l/h]	MAX	494	841	1672	327	686	1548
			MED	409	629	981	291	533	1162
			MIN	282	441	524	211	392	482
		Pressure drop [kPa]	MAX	9,2	17,2	22,5	7,9	17,0	30,0
			MED	6,9	10,6	14,0	6,6	11,0	18,1
			MIN	3,9	6,1	5,8	4,1	6,7	10,1
Heating 2 pipes	Air temperature 20 °C Inlet water temperature 50 °C	Heating capacity [kW]	MAX	3,66	6,00	11,20	-	-	-
			MED	2,93	4,34	8,4	-	-	-
			MIN	1,96	2,88	4,80	-	-	-
		Water flow [l/h]		Values as Cooling, accordingly to the EUROVENT Standards and UNI ENV 1397 Norm					
		Pressure drop [kPa]	MAX	7,7	14,9	19,5	-	-	-
			MED	5,4	8,7	11,4	-	-	-
			MIN	2,8	4,5	4,7	-	-	-
Heating	Air temperature 20 °C Water temperature 70/60 °C	Heating capacity [kW]	MAX	6,03	9,81	20,52	2,59	3,86	8,74
			MED	4,82	7,06	15,24	2,14	3,13	6,88
			MIN	3,23	4,69	7,22	1,60	2,39	5,15
		Water flow [l/h]	MAX	539	855	1910	222	332	752
			MED	446	634	1417	184	269	598
			MIN	314	436	811	137	206	376
		Pressure drop [kPa]	MAX	9,2	15,7	24,1	8,9	19,6	39,4
			MED	6,5	9,0	13,7	6,4	13,4	33,1
			MIN	3,4	4,5	4,4	3,7	8,2	15,0
Further data		Air flow [m3/h]	MAX	605	733	1454	605	733	1454
			MED	425	492	981	425	492	981
			MIN	235	314	524	235	314	524
		Sound power level [db(A)]	MAX	54	58	61	54	58	61
			MED	46	49	51	46	49	51
			MIN	31	38	33	31	38	33
		Sound pressure level [db(A)] (1)	MAX	45	49	51	45	49	51
			MED	37	40	41	37	40	41
			MIN	22	29	23	22	29	23
		Power input [W] (2)	MAX	27	42	119	27	42	119
		Absorbed current [A] (2)	MAX	0,24	0,38	0,94	0,24	0,38	0,94
		Water content [l]		1,34	2,12	4,26	1,34	2,12	4,26
							(0,3)(3)	(0,3)(3)	(0,6)(3)

(1) Sound pressure level in a 100 m³ room, 1.5 m distance and reverberating time of 0.3 s.
(2) Electrical supply: 230-1-50 [V-ph-Hz].
(3) Additional row.

Eurapo take part in EUROVENT certification program. Above mentioned models are in the FC section of the website.

In order to select the cassette with calculating conditions differing form the standard ones and in presence of the F7 filter (UCS/H), please use the selection software or contact EURAPO staff.

The printed data could be modified without any notice.

TECHNICAL DATA (asynchronous)

				2 pipes					4 pipes				
				621	622	623	921	922	641	642	643	941	942
Cooling	Air temperature 27 °C db., 19 °C w.b. Water temperature 7/12 °C	Total cooling capacity [kW]	MAX	2,58	3,73	4,81	8,76	10,15	1,81	3,16	3,97	7,62	9,20
			MED	1,80	2,87	3,86	6,57	8,35	1,36	2,51	3,28	5,75	7,61
			MIN	1,43	2,30	2,53	3,89	5,71	1,11	2,06	2,27	3,44	5,26
		Sensible cooling capacity [kW]	MAX	2,17	2,84	3,79	6,23	7,80	1,67	2,54	3,33	6,11	7,62
			MED	1,42	2,09	2,94	4,57	6,31	1,19	1,95	2,66	4,50	6,19
			MIN	1,09	1,66	1,83	2,64	4,19	0,96	1,55	1,75	2,61	4,14
		Water flow [l/h]	MAX	444	642	827	1503	1742	311	544	683	1307	1579
			MED	310	494	664	1127	1433	234	432	563	987	1306
			MIN	246	395	435	667	980	191	354	389	590	903
		Pressure drop [kPa]	MAX	7,8	10,9	16,5	20,1	26,0	7,5	11,2	16,7	23,2	32,0
			MED	4,6	7,3	11,5	12,3	19,0	4,8	7,8	11,9	14,1	23,0
			MIN	3,2	5,2	6,0	4,5	9,0	3,6	5,7	6,6	5,0	12,0
Heating 2 pipes	Air temperature 20 °C Inlet water temperature 50 °C	Heating capacity [kW]	MAX	2,74	4,50	7,00	10,4	11,74	-	-	-	-	-
			MED	1,83	3,34	5,51	7,63	9,50	-	-	-	-	-
			MIN	1,42	2,59	3,45	4,31	6,25	-	-	-	-	-
		Water flow [l/h]		Values as Cooling, accordingly to the EUROVENT Standards and UNI ENV 1397 Norm									
		Pressure drop [kPa]	MAX	7,0	8,5	6,4	18,9	22,0	-	-	-	-	-
			MED	3,4	5,0	3,1	11,3	16,0	-	-	-	-	-
			MIN	2,2	2,0	2,1	5,0	8,0	-	-	-	-	-
Heating	Air temperature 20 °C Water temperature 70/60 °C	Heating capacity [kW]	MAX	4,54	7,34	11,44	17,54	19,82	2,33	3,13	3,83	7,53	8,86
			MED	3,01	5,42	8,99	12,85	16,02	1,72	2,56	3,25	5,98	7,56
			MIN	2,37	4,2	5,61	7,22	10,52	1,44	2,12	2,34	3,93	5,58
		Water flow [l/h]	MAX	486	645	839	1609	1873	201	269	330	661	778
			MED	339	493	669	1201	1532	147	221	280	525	664
			MIN	297	385	430	686	1046	121	182	201	345	490
		Pressure drop [kPa]	MAX	8,5	8,7	6,7	20,5	24,0	7,2	13,1	18,9	30,8	40,9
			MED	4,1	5,0	3,2	12,1	17,3	4,2	9,2	14,2	19,4	31,1
			MIN	3,1	2,0	2,1	5,0	8,6	3,0	6,6	7,8	9,7	18,0
Further data		Air flow [m3/h]	MAX	495	495	717	1240	1588	495	495	717	1240	1588
			MED	269	351	525	790	1165	269	351	525	790	1165
			MIN	182	269	308	420	686	182	269	308	420	686
		Sound power level [db(A)]	MAX	49	49	58	54	61	49	49	58	54	63
			MED	34	40	50	45	53	34	40	50	45	55
			MIN	29	34	37	30	40	29	34	37	30	40
		Sound pressure level [db(A)] (1)	MAX	40	40	49	44	51	40	40	49	44	53
			MED	25	31	41	35	43	25	31	41	35	45
			MIN	20	25	28	20	30	20	25	28	20	30
		Power input [W] (2)	MAX	53	52	85	129	161	52	52	86	127	161
		Absorbed current [A] (2)	MAX	0,25	0,24	0,36	0,62	0,78	0,24	0,24	0,38	0,60	0,78
		Water content [l]		1,34	2,12	2,12	4,26	4,26	1,34	2,12	2,12	4,26	4,26
									(0,3)(3)	(0,3)(3)	(0,3)(3)	(0,6)(3)	(0,6)(3)

(1) Sound pressure level in a 100 m³ room, 1.5 m distance and reverberating time of 0.3 s.
(2) Electrical supply: 230-1-50 [V-ph-Hz].
(3) Additional row.

Eurapo take part in EUROVENT certification program. Above mentioned models are in the FC section of the website.

In order to select the cassette with calculating conditions differing form the standard ones and in presence of the F7 filter (UCS/H), please use the selection software or contact EURAPO staff.

The printed data could be modified without any notice.

Eurapo Srl
Via A. Malignani, 12
33170 Pordenone - Italy
T +39 0434 572552
F +39 0434 28667
info@eurapo.it
www.eurapo.it

carecom.it

IDEATO, PROGETTATO E REALIZZATO IN ITALIA
CREATED, DESIGNED AND PRODUCED IN ITALY

QUALITÀ CERTIFICATA LABORATORI EURAPO - CERTIFIED QUALITY EURAPO LABORATORIES

EUROVENT CERTIFIED PERFORMANCE
www.eurovent-certification.com

www.eurovent-certification.com
www.certiflash.com

6DC0210 - EN1600