EN

DUCTED UNITS

EBH
EDS

EURAPO

INTEGRATED
COMFORT
SYSTEMS

EBH | EDS HIGH PRESSURE UNITS

EBH high pressure ducted units and EDS Double Skin units, thanks to their high pressure fan decks, permit to satisfy every request of heating and cooling applications in big environments, where ducted air distribution is requested. They are suitable for horizontal installation.
These are units for COOLING and HEATING applications; they are fed with cold and hot water and used according to their relevant performance features. EBH and EDS units are components of cooling and/or heating systems; consequently, they are without any safety devices on the water circuit. These units have been designed for temperatures up to 100 °C.
When you want to connect this high pressure unit to a condensing unit in COOLING mode, it must be ordered with a direct expansion coil (optional upon request, except for sizes 060÷070).

EDS
HIGH PRESSURE UNIT

EBH
HIGH PRESSURE UNIT

EBH features

• 6 SIZES for horizontal ducted installation, 2 and 4 pipe system.
• HIGH PRESSURE: they are designed for ducted installation with external static pressure up to 300 Pa.
• STRUCTURE is realized in galvanized metal sheet, insulated internally; in order to facilitate all maintenance operations, the structure is divided in three separate and independent sections (condensate tray, fan deck, air filter).
• HEAT EXCHANGERS can have 2, 3 or 4 rows, made by copper pipes and aluminium fin pack; 5-row coils are available for sizes 060 and 070. Up to size 050 all coils are provided with air vent valves. For sizes 060 and 070, the air vent valve is supplied only with the valve kit (optional).
• REVERSIBLE WATER CONNECTIONS: these high-pressure units can be ordered with right (standard) or left water connections; it is possible to reverse the water connections on site, if necessary.
• FAN DECK is composed by a 3 speed motor and two centrifugal galvanized steel scrolls. All motors are Class F and IP44 protected; they are provided with a permanently connected capacitor and thermal protection of the windings with automatic reset.
• CONDENSATE TRAY is realized in galvanized steel with water discharge pipes on both sides.
• AIR FILTER consists of a washable polyester acrylic fibre, pleated and protected by a metal frame.
The filter section can be easily removed for cleaning and maintenance. Filtration class G3.
• ELECTRIC PANEL is composed by a terminal board with screw terminals contained in an ABS plastic box (IP30). A supporting relay is supplied as standard starting from size 040.
• 4 BRACKETS are supplied along with the unit, to fix it to the ceiling.

EBH
UNIT WITH AIR SUPPLY PLENUM

EDS features

- 9 SIZES for horizontal ducted installation, 2 pipe system.
- HIGH PRESSURE: they are designed for ducted installation with external static pressure up to 300 Pa.
- DOUBLE SKIN STRUCTURE is composed by insulated 25 mm thick panels, colour RAL9002, and aluminium supporting frame.
- HEAT EXCHANGERS can have 2, 3 or 4 rows, made by copper pipes and aluminium fin pack; 5-row coils are available for sizes 060 and 070. Up to size 050 all coils are provided with air vent valves. For sizes 060 and 070 of the EBH model, the air vent valve is supplied only with the valve kit (optional).
- NOT REVERSIBLE WATER CONNECTIONS: EDS units can be ordered with right (standard) or left water connections.
- FAN DECK is composed by a 3 speed motor and two centrifugal galvanized steel scrolls. All motors are Class F and IP44 protected; they are provided with a permanently connected capacitor and thermal protection of the windings with automatic reset.
- CONDENSATE TRAY is realized in galvanized steel with water discharge pipe located on the water connections' side.
- AIR FILTER consists of a washable polyester acrylic fibre, pleated and protected by a metal frame. The filter section can be easily removed for cleaning and maintenance. Filtration class G3.
- ELECTRIC PANEL is composed by a terminal board with screw terminals contained in a high protection box (IP55). A supporting relay is supplied as standard starting from size 040.
- 4 BRACKETS are supplied along with the unit, to fix it to the ceiling.

EDS
HIGH PRESSURE UNIT

HIGH PRESSURE UNIT **EDS**

The big advantages of the EURAPO high pressure units are:

- quiet operation
- reliability
- excellent quality/price ratio
- high coefficient of performance
- sturdiness and solid construction
- accurate choice of each single component
- environmentally friendly sandwich panels (EDS model)
- high protection electric panel (IP55), available also on EBH models
- class F fan motors with high protection grade (IP44)
- easy installation and maintenance operations

HIGH PRESSURE UNIT **EBH**

Accessories for EBH units:

- VALVE KIT 3 way 4-port regulating valves with ON/OFF or modulating actuators, provided with copper connection kit and insulation shell (supplied loose).
- CONDENSATE PUMP with 6 m maximum head.
- SPECIAL FILTERS made of washable polyester acrylic fibre, filtration class G4 or F5.
- ADDITIONAL COILS for hot water with 2 or 3 rows, for units to be installed in 4-pipe systems.
- ELECTRIC HEATER it is an additional section to be mounted on the air outlet, provided with all necessary safety thermostats. The heating capacity is different from size to size, up to 9 kW.
- AIR DELIVERY/AIR INTAKE PLENUM with several frontal spigots.
- RAL 9001 PAINTING with oven dried epoxy powders. All RAL colours are available.
- REGULATING SYSTEMS: the whole range of EURAPO regulators is available: fan speed selectors, electro-mechanical controllers, electronic controllers with microprocessor, digital regulators with a centralized supervision system communicating via Bus based on standard protocols. For more information, please either refer to the specific EURAPO technical literature or visit the official web site www.eurapo.it.

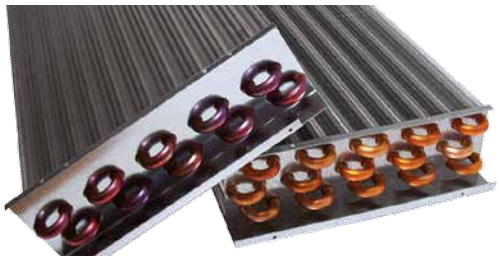

Accessories for EDS units:

- VALVE KIT 3 way 4-port regulating valves with ON/OFF or modulating actuators, provided with copper connection kit.
- CONDENSATE PUMP with 6 m maximum head.
- SPECIAL FILTERS made of washable polyester acrylic fibre, filtration class G4 or F5.
- REGULATING SYSTEMS: the whole range of EURAPO regulators is available: fan speed selectors, electro-mechanical controllers, electronic controllers with microprocessor, digital regulators with a centralized supervision system communicating via Bus based on standard protocols. For more information, please either refer to the specific EURAPO technical literature or visit the official web site www.eurapo.it.

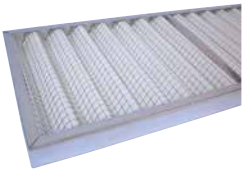

EBH EDS

Technical data EBH:

STANDARD TECHNICAL DATA 50 Pa EXTERNAL STATIC PRESSURE-ASYNCHRONOUS									
Models			EBH **020**	EBH **030**	EBH **040**	EBH **050**	EBH **060**	EBH **070**
MAX External static pressure [Pa]			125	175	200	250	300	300
Total cooling capacity [kW]	(1)	MAX	7,18	10,42	13,24	15,47	20,35	27,74
		MED	5,91	8,54	11,18	13,43	16,80	26,20
		MIN	3,19	7,21	9,32	12,01	13,94	23,86
Heating capacity [kW]	(2)	MAX	9,93	14,66	18,43	21,46	28,77	36,83
		MED	7,40	11,44	15,55	18,51	23,55	33,20
		MIN	4,01	9,41	12,03	16,24	19,36	31,30
Air volume [m3/h]		MAX	1387	2160	2760	3513	4118	5535
		MED	928	1450	2076	2746	3176	4937
		MIN	491	1115	1545	2320	2548	4347
Sound pressure level [dB(A)]	(3)	MAX	58	56	60	61	67	69
		MED	45	50	53	58	60	66
		MIN	31	45	47	54	55	63
Absorbed current [A]		MAX	0,82	1,90	2,24	3,08	4,85	8,03
		MED	0,53	1,35	1,62	2,27	3,29	7,54
		MIN	0,31	1,11	1,20	1,88	2,63	6,71
Power input [W]		MAX	187	392	508	703	1056	1790
		MED	120	310	360	510	723	1638
		MIN	69	255	260	414	568	1436
N° rows (standard)			4	4	4	4	4	4
Fan deck features			Class F (155 °C) - IP44					
Power supply [V-ph-Hz]			230-1-50					

(1) Air temperature: 27 °C d.b., 48% rel. humidity - Water temperature: 7/12 °C
(2) Air temperature: 20 °C, 50% rel. humidity - Water inlet temperature: 50 °C - Water flow value as cooling, according to EUROVENT standards and UNI ENV 1397 Norm.
(3) Sound levels are referred to units with air delivery plenum with spigots, in open field at 1 meter, according to Eurovent standards "High static ducted fan coil - Acoustical measurements in reverberation room (2004)".

Technical data EDS:

STANDARD TECHNICAL DATA 50 Pa EXTERNAL STATIC PRESSURE-ASYNCHRONOUS											
Models			EDS **004**	EDS **006**	EDS **008**	EDS **020**	EDS **030**	EDS **040**	EDS **050**	EDS **060**	EDS **070**
MAX External static pressure [Pa]			50	50	50	125	175	200	250	300	300
Total cooling capacity [kW]	(1)	MAX	2,42	3,26	4,50	6,36	8,53	11,37	12,62	17,37	19,48
		MED	1,69	2,56	3,86	5,91	7,41	10,17	11,91	14,77	18,26
		MIN	-	1,87	2,88	3,97	6,30	9,51	11,07	12,41	16,70
Heating capacity [kW]	(2)	MAX	3,18	4,26	5,50	8,21	10,75	15,20	17,89	25,20	29,79
		MED	2,27	3,38	4,86	8,01	9,81	13,50	16,71	21,13	27,90
		MIN	-	2,41	3,84	5,38	8,14	12,51	15,24	17,39	25,61
Air volume [m3/h]		MAX	401	596	794	1441	2185	2525	3248	4078	4970
		MED	272	428	658	1247	1566	1998	2733	3258	4522
		MIN	-	270	472	708	1182	1565	2325	2590	3978
Sound pressure level [dB(A)]	(3)	MAX	53	50	49	55,5	56	58	61	67	68
		MED	39	40	44	51,1	51	53	57	60	66
		MIN	-	31	38	39,1	46	47	54	55	63
Absorbed current [A]		MAX	0,26	0,35	0,42	0,99	1,86	1,81	2,69	4,17	6,96
		MED	0,20	0,27	0,35	0,76	1,39	1,32	2,05	3,07	6,38
		MIN		0,20	0,28	0,47	1,17	1,00	1,77	2,44	5,76
Power input [W]		MAX	59	79	97	202	382	419	608	956	1628
		MED	46	61	81	165	322	298	467	703	1476
		MIN	-	46	64	107	271	224	393	561	1321
N° rows (standard)			4	4	4	4	4	4	4	4	4
Fan deck features			Class F (155 °C) - IP44								
Power supply [V-ph-Hz]			230-1-50								

Dimensions [mm] EBH UNIT

Model	A	B	C	D	E	F	G	H	I	Connections	Spigots
020÷030	990	900	403	949	362	135	630	960	306	G 1/2" F	3
040÷050	1240	900	403	1199	362	135	630	1210	300	G 1/2" F	4
060÷070	1635	1158	513	1594	472	135	888	1604	311	G 1" M	5

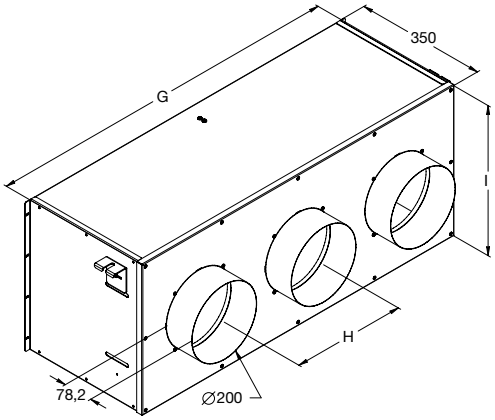

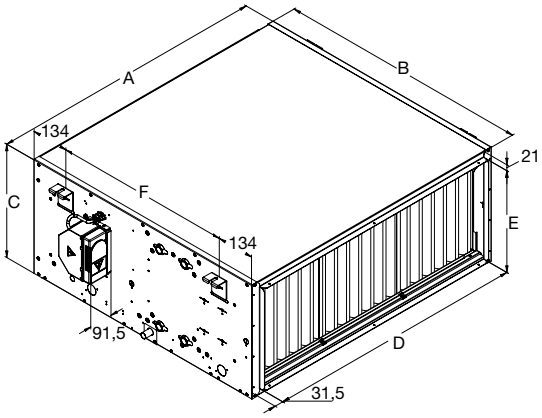

Dimensions [mm] EDS UNIT

Model	A	B	C	D	E	F	G	H	I	Connections
004	882	742	924	390	799	250	855	306	798	G 3/4" M
006÷008	1007	867	1049	390	924	250	855	306	798	G 3/4" M
010÷030	1132	992	1174	440	1049	300	855	357	798	G 3/4" M
040÷050	1382	1242	1424	440	1299	300	855	357	798	G 3/4" M
060÷070	1777	1637	1819	550	1694	410	1030	467	978	G 1" M

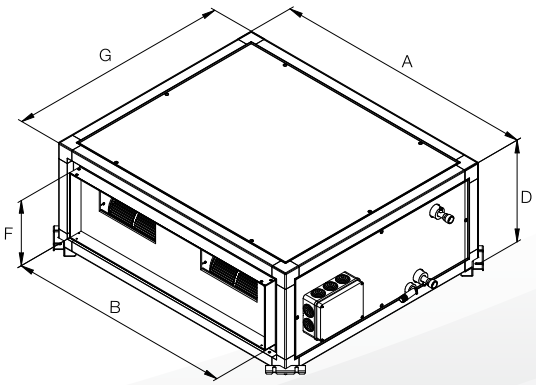

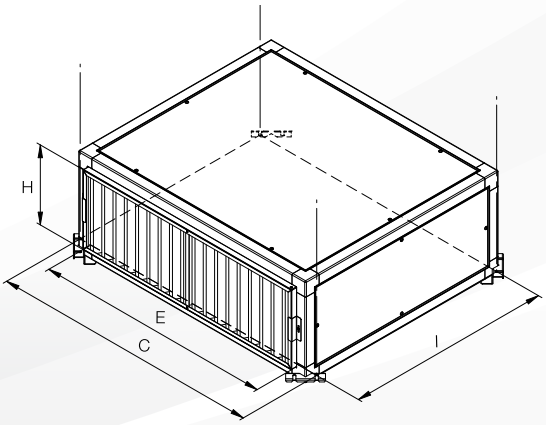

EST

ENERGY SAVING TECHNOLOGY

EST (Energy Saving Technology) is applied to the EURAPO fan coil units and cassette units. It permits to obtain extremely low electrical absorption and a continuous modulation of the air flow, constantly related to the concrete need of energy in the room.

EST technology is composed by a brushless motor combined to a dedicated electronic device (inverter), managed by specific regulators developed by EURAPO.

In comparison to the traditional units equipped with asynchronous three-speed-motors, the fan coil and cassette units with brushless motors can obtain a considerable **energy saving**, by reducing the power consumption **up to 70%.**

Comparison electrical absorption [W] asynchronous/brushless

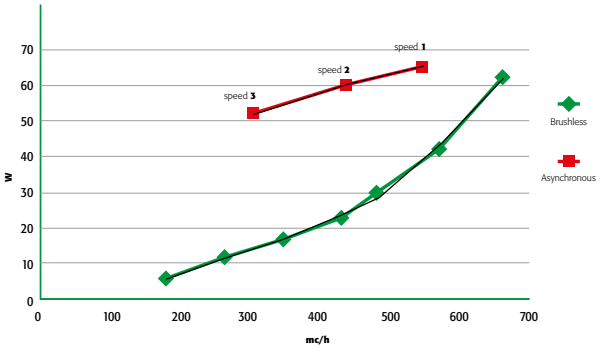

Energy saving (%) by using a brushless motor compared to asynchronous motor

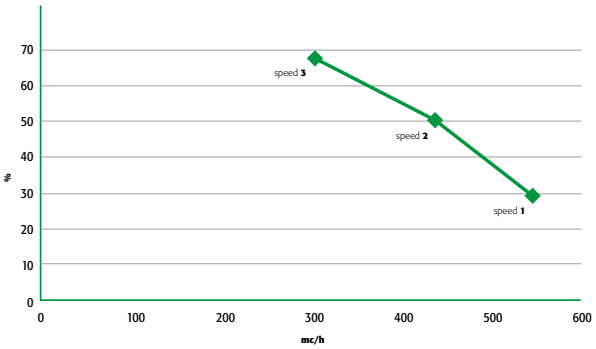

Thanks to the step-less modulation of the fan speeds it is possible to accurately regulate the air volume in a very precise way, in strict relation to the real need of air conditioning in the room. Oscillations in the temperature and relative humidity are reduced at lowest level: a guarantee for the **highest comfort in the room.**

The possibility to reach very low air volumes makes the units extremely quiet at the lowest motor revolutions. **EST** technology is designed in particular for offices, hospitals, nursing homes and hotels.

It is available for the **EURAPO** range of fan coil units, cassette units and ducted units.

Technical data HIGH PRESSURE UNIT EBH

STANDARD TECHNICAL DATA 50 Pa EXTERNAL STATIC PRESSURE-EST

Models			EBH **020**	EBH **030**	EBH **040**	EBH **050**	EBH **060**
MAX External static pressure [Pa]			125	175	200	250	300
Total cooling capacity [kW]	**(1)**	9 V	7,13	9,66	14,69	16,15	20,84
Heating capacity [kW]	**(2)**	9 V	10,16	13,32	18,13	22,54	29,40
Air volume [m3/h]		9 V	1430	1981	2712	3772	4306
Sound pressure level [dB(A)]	**(3)**	9 V	54	54	59	60	67
Absorbed current [A]		9 V	1,38	1,04	1,32	2,74	3,37
Power input [W]		9 V	185	232	296	617	762
N° rows (standard)			4	4	4	4	4
Fan deck features			Class F (155 °C) - IP44				
Power supply [V-ph-Hz]			230-1-50				

(1) Air temperature: 27 °C d.b., 48% rel. humidity - Water temperature: 7/12 °C
(2) Air temperature: 20 °C, 50% rel. humidity - Water inlet temperature: 50 °C - Water flow value as cooling, according to EUROVENT standards and UNI ENV 1397 Norm.
(3) Sound levels are referred to units with air delivery plenum with spigots, in open field at 1 meter, according to Eurovent standards "High static ducted fan coil - Acoustical measurements in reverberation room (2004)".

Technical data HIGH PRESSURE UNIT EDS

STANDARD TECHNICAL DATA 50 Pa EXTERNAL STATIC PRESSURE-EST

Models			EDS **020**	EDS **030**	EDS **040**	EDS **050**	EDS **060**
MAX External static pressure [Pa]			125	175	200	250	300
Total cooling capacity [kW]	**(1)**	9 V	6,70	8,55	11,57	12,90	19,40
Air volume [m3/h]		9 V	1554	2191	2610	3354	4768
Sound pressure level [dB(A)]	**(3)**	9 V	54	54	59	60	67
Absorbed current [A]		9 V	1,38	1,24	1,23	2,18	3,83
Power input [W]		9 V	186	279	275	488	870
N° rows (standard)			4	4	4	4	4
Fan deck features			Class F (155 °C) - IP44				
Power supply [V-ph-Hz]			230-1-50				

EST-EDS unit is available for cooling operation only.

Eurapo Srl
Via A. Malignani, 12
33170 Pordenone - Italy
T +39 0434 572552
F +39 0434 28667
info@eurapo.it
www.eurapo.it

IDEATO, PROGETTATO E REALIZZATO IN ITALIA
CREATED, DESIGNED AND PRODUCED IN ITALY

QUALITÀ CERTIFICATA LABORATORI EURAPO - CERTIFIED QUALITY EURAPO LABORATORIES

EUROVENT CERTIFIED PERFORMANCE
www.eurovent-certification.com

www.eurovent-certification.com
www.certiflash.com

6DC0302 - EN1400