EN

UCS
UCS/M
UCS/H
UCS900

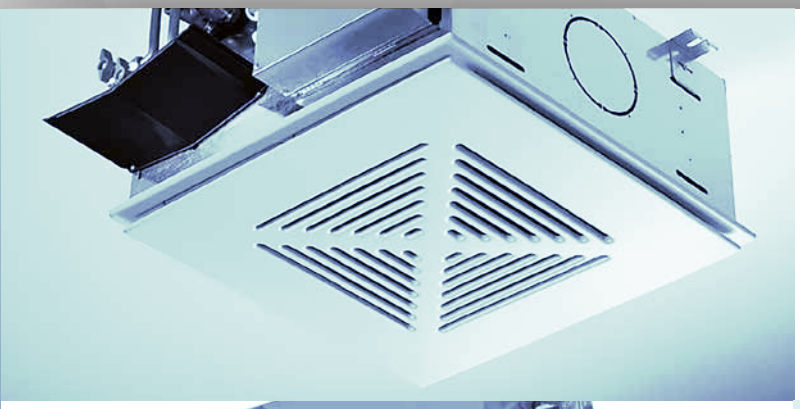

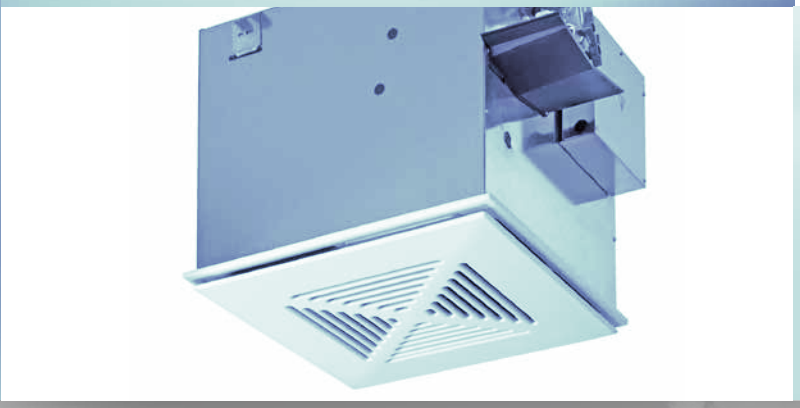

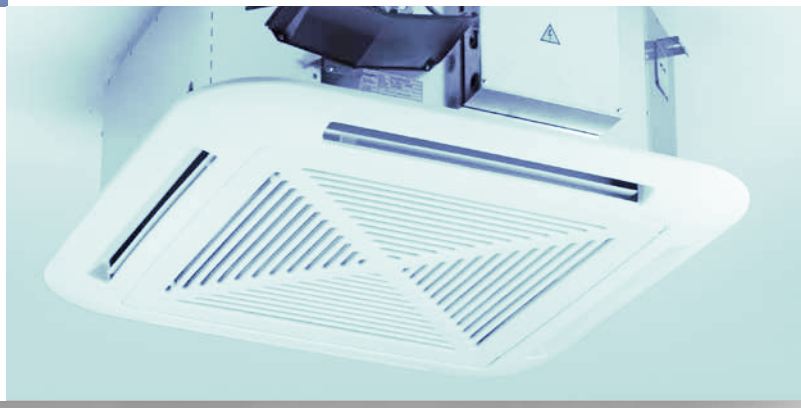

EURAPO INTEGRATED COMFORT SYSTEMS

EST

ENERGY SAVING TECHNOLOGY

EST (Energy Saving Technology) is applied to the **EURAPO** fan coil units and cassette units. It permits to obtain extremely low electrical absorption and a continuous modulation of the air flow, constantly related to the concrete need of energy in the room.

EST technology is composed by a brushless motor combined to a dedicated electronic device (inverter), managed by specific regulators developed by **EURAPO.**

In comparison to the traditional units equipped with asynchronous three-speed-motors, the fan coil and cassette units with brushless motors can obtain a considerable **energy saving**, by reducing the power consumption **up to 70%.**

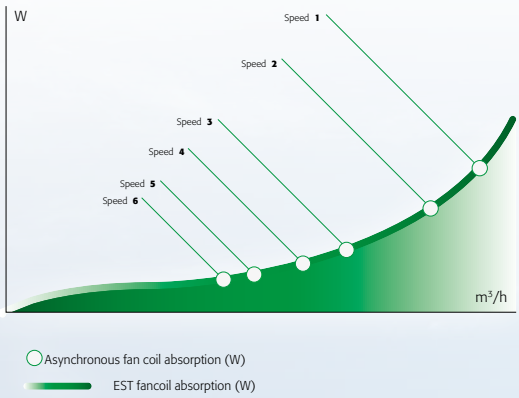

Thanks to the step-less modulation of the fan speeds it is possible to accurately regulate the air volume in a very precise way, in strict relation to the real need of air conditioning in the room. Oscillations in the temperature and relative humidity are reduced at lowest level: a guarantee for the **highest comfort in the room**.

The possibility to reach very low air volumes makes the units **extremely quiet** at the lowest motor revolutions.

EST technology is designed in particular for offices, hospitals, nursing homes and hotels.

It is available for the **EURAPO** range of fan coil units, cassette units and ducted units.

The EST technology consists of a brushless motor combined to a dedicated electronic device (inverter), managed by specific regulators. The controller uses a modulating signal with 0-10Vdc tension in order to regulate the fan speed.

The brushless electric motor is composed by a rotor having permanent magnets, whose magnetic fields interact with the ones produced by the stator winding. The transfer of current is no longer by mechanical commutation (sliding contacts) but by an electronic commutation system: an electronic controller (inverter) powers the motor's stator and generates rotating magnetic fields, that determine the rotor's speed.

For applying the EST technology also to the ducted units, the inverter is provided with DIP SWITCHES that can be also set on site, during start-up of the unit. This high flexibility grants the proper configuration for every kind of installation, by personalization of the Dip Switches accordingly to the pressure drop in the system.
Brushless motors develop much less heat than the traditional brushed motors and they have much lower mechanical resistance than the standard asynchronous ones. They offer several advantages, like as higher efficiency, longer lifetime, less need of maintenance.
The absence of brushes eliminates also the main source of electromagnetic noise.
By giving a 0-10Vdc signal to the inverter, an electronic regulator intervenes by simply managing the fan speed and the rotor's torque in a continuous way, adapting with extreme precision the air volume to the real and punctual requirements in the room.
For managing all units equipped with brushless motors, EURAPO developed a new microprocessor control, available both built-in the unit (EDCL) and for remote installation on the wall (EDCR).
Also the **OMNIBUS digital system** has been implemented in order to be combined to the EST technology: the new cards for fan coil units (OBV10) and for cassette units (OBU10) can be connected to the new OMNIBUS consoles, designed for managing fan coil and cassette units with brushless motors. The consoles are available for on-wall installation (ODC236), fitted in the fan coil unit or for built-in the wall installation, on 503 modules (ODC235 white colour and ODC245 black colour).
OMNIBUS regulators give the possibility to fully control the fan speed (0-100%) and/or to manually select three fan steps (high, med and low speed): it is actually possible to set in every moment and very easily the three different levels of motor's rotation, in order to fulfil specific thermal or acoustical requirements.

FEATURES

- 0-10Vdc control signal
- Low mechanical resistance and low overheating
- Wide range of fan speed regulation, especially at the lowest revolutions
- Continuous regulation of the fan speeds (0-100%)
- Possibility to manually set the desired three fan steps (by using OMNIBUS regulators)
- Available for Sphera, Sigma, Prisma, Low Body, Incasso fancoil units, UCS, UCS/M, UCS/H cassette units and CH/H, EBH and EDS ducted units

ADVANTAGES

- Energy saving: electrical absorption reduced up to 70%
- Higher efficiency: possibility to adapt the air volume and the capacities accordingly to the real room loads
- Higher comfort: reduced oscillation of the temperature and relative humidity in the room
- Extremely quiet functioning of the unit, thanks to the operation at low revolutions
- Reduced wearing and higher reliability
- Longer expected lifetime of the motor

UCS

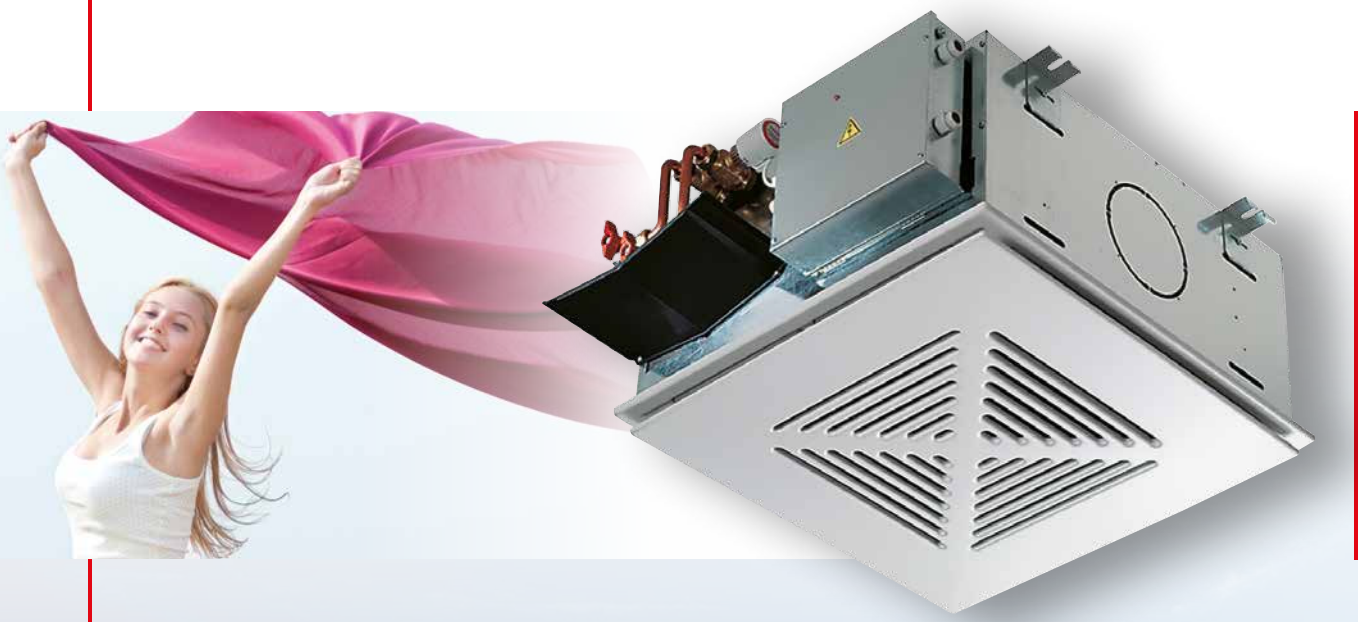

Cassette fancoil,
for heating and cooling mode,
2 and 4 pipe systems, capacity from 1,30 kW to 4,79 kW.

EURAPO has designed a Cassette fancoil called UCS, for 2 and 4 pipe systems, to satisfy all the requests of comfort and space optimization, above all in public environments, offices and shops.
The UCS Cassette has been planned in accordance with quality standards that characterize the complete EURAPO production since years: the particular care to the functionality and technical reliability of all the components and the continuous research for new technological solutions, allowed to obtain optimum performances, paying also attention to the environmental welfare.

Available in 6 models, the UCS overall dimensions allow an easy installation in modular false ceilings (600x600), while the hydraulic and electrical connections, located on the same side, facilitate the maintenance operations.
The unit in basic configuration is equipped with a condensate pump, and it is pre-arranged for the connection to an additional air outlet duct and/or to an external air intake.
The air intake/outlet grilles are designed in order to avoid that people are directly invested by the air flow (thanks to the Coanda effect), by reaching the maximum levels of comfort.
The CASSETTE unit can be managed by the complete range of EURAPO regulators: from the standard electro-mechanical and microprocessor controls to the digital controls (OMNIBUS), compatible to BMS Systems.

UCS/M

Cassette fancoil,
for heating and cooling mode,
for 2 and 4 pipe system, capacity from 1,30 kW to 4,79 kW.

The UCS/M cassette unit is born as an aesthetical variation of the consolidated and appreciated Eurapo cassette units.
The UCS/M is characterized by the micro-drilled air intake grill and its air diffusion frame entirely realized in painted metal sheet, perfectly adaptable to modular false ceilings.

Similarly to the standard UCS models, the metallic grill has been designed to obtain the Coanda effect, that guarantees an uniform and pleasant air diffusion, by avoiding that people are directly invested by outgoing air flow.
The UCS/M is not provided with air outlet flaps for the deviation of the air flow, therefore the air diffusion is homogeneous on all the four sides of the cassette.

The micro-drilled air intake grill is perfectly integrated in the outer frame, which contains the air filter, easily accessible to make the cleaning operation extremely comfortable.

UCS/H

Cassette fancoil without condensate pump,
for heating and cooling mode,
2 and 4 pipe systems, capacity from 1,3 kW to 4,79 kW.

UCS/H cassette unit has been designed to allow a natural condensate water discharge, for gravity; in this way, condensate pump is not necessary.

UCS/H unit is particularly indicated when reduced maintenance operations are required, for safety or sanitary locations (banks, police stations, hospitals, sanitary environs), or if very low sound levels are tolerated.

Similarly to the standard UCS models, the grill has been designed to obtain the Coanda effect, that guarantees an uniform and pleasant air diffusion, avoiding that people are directly invested by outgoing air flow.

The absence of the condensate pump allows a greater silence, reduced electric consumptions and limited maintenance operations.

UCS900

Cassette fancoil 900x900
for heating and cooling mode,
2 and 4 pipe system, capacity from 3,90 kW to 10,15 kW.

With an innovative, essential and clean design, which fits in every kind of environment, the UCS900 water cassette unit is the result of the stylist research to present an innovative product in terms of performance, low sound level, comfort and regulation flexibility.
The aesthetics of this unit is accurate in every detail, planned in accordance with the EURAPO experience, appreciated by architects and designers from all over the world.
The UCS900 water cassette unit can be used for heating and cooling applications; it has been designed to fit into modular or not modular false ceilings, in 2 and 4 pipe systems.

The 900x900mm dimension of the cassette unit permits to satisfy the cooling demand of ambient having quite big volumes.
The UCS900 units in basic configuration are equipped with a condensate pump and they are pre-arranged for the connection to an additional air outlet duct and/or to an external air intake, by using the specific collars, supplied as standard in a kit.
The particular shape of the air outlet plenum is designed specifically in order to obtain the Coanda effect, a phenomenon for which the air outlet flow tends to adhere to the ceiling and falls down smoothly, without blowing directly towards people in the room: the optimal solution for an uniform and pleasant air diffusion.
The UCS900 cassette unit can be managed by the complete range of EURAPO regulators: from the standard electro-mechanical and microprocessor controls to the digital controls, compatible to BMS Systems.

OMNIBUS
Building Management System

Yet designing and producing air conditioning systems comprising selected, reliable components is not sufficient in itself to guarantee high standards of air-conditioned comfort, these also need to be integrated and harmonised with the **intelligence controlling them**.
Only complete synergy between **terminal unit performance** and **heat regulating devices** can guarantee optimum results and meet the most modern requirements in comfort management simply and efficiently.

The **EURAPO-OMNIBUS** Digital System is designed to fully regulate the water terminal units (such as fan coil units, water cassette units, high pressure ducted fan coil units and radiant systems) for domestic use, residential buildings, public rooms.
This controller permits to be easily programmed by the installing company and configured accordingly to each particular type of system.

- Elegant design
- LCD Display
- Touch screen
- Humidity sensor
- Plug & Play connections
- Weekly, daily and monthly programs
- Scenarios configuration
- Compatible with brushless and inverter technology
- Flexible configuration
- Service tool available
- MODBUS RTU: free protocol
- ETHERNET (TCP/IP) compatibility
- LONWORKS® compatibility
- Different access levels to the Building Management System

OTOUCH

INNOVATIVE TOUCH SCREEN DEVICE

OTOUCH is a control and supervision system developed by Eurapo Laboratories in order to manage residential comfort. This high tech solution is matched with an easy-to-use graphical interface which has been designed in cooperation with Udine University in order to guarantee an intuitive and simply comfort control.

OTOUCH can functionally fully control air conditioning system devices (such as fan coils units) or radiant systems (such as hydraulic actuators or dehumidifiers) or even both at the same time, following an innovative idea of control philosophy. Its distinctive feature consists of being able to monitorize and control all functions of fan coils units toghether with the capability of interacting and integrating different HVAC system devices in the same control panel.

OTOUCH can control:

- Cooling and heating units (chillers/boilers)
- HVAC system pumps
- Mixing valves (for radiant systems)
- Thermal zone valves
- Dehumidifiers
- Fan coil units

UCS

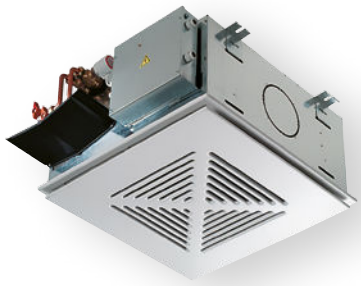

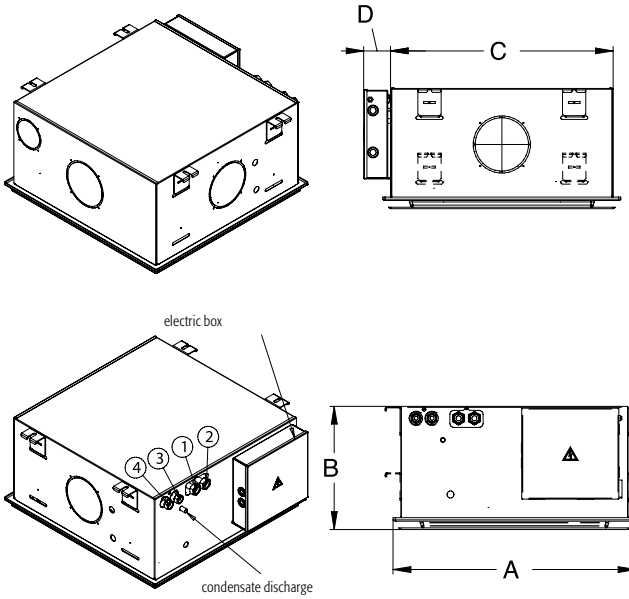

2 pipes installation		
1	Water inlet	3/4" F
2	Water outlet	3/4" F
4 pipes installation		
1	Cooling water inlet	3/4" F
2	Cooling water outlet	3/4" F
3	Heating water inlet	1/2" F
4	Heating water outlet	1/2" F

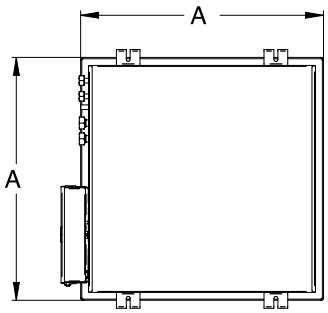

UCS

Dimensions (mm) and weights for UCS	
A	615
B	312
C	575
D	70
Kg	30

UCS/M

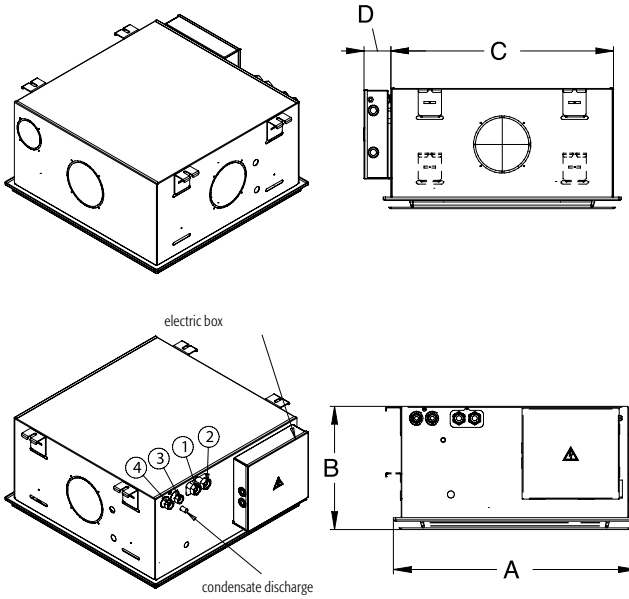

2 pipes installation		
1	Water inlet	3/4" F
2	Water outlet	3/4" F
4 pipes installation		
1	Cooling water inlet	3/4" F
2	Cooling water outlet	3/4" F
3	Heating water inlet	1/2" F
4	Heating water outlet	1/2" F

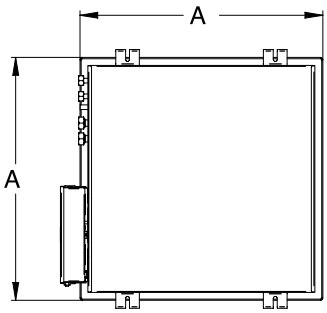

UCS/M

Dimensions (mm) and weights for UCS/M	
A	615
B	312
C	575
D	70
Kg	33

UCS/H

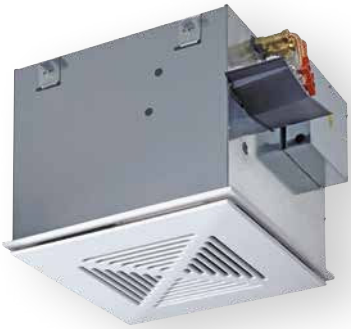

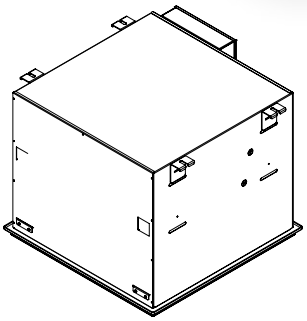

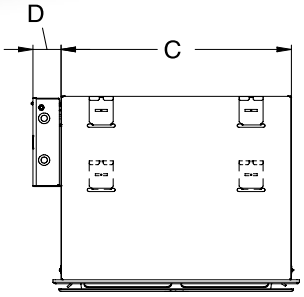

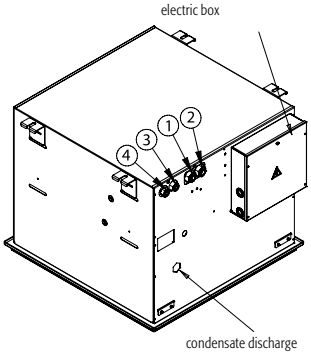

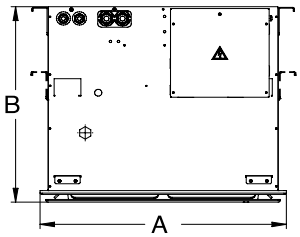

	2 pipes installation	
1	Water inlet	3/4" F
2	Water outlet	3/4" F

	4 pipes installation	
1	Cooling water inlet	3/4" F
2	Cooling water outlet	3/4" F
3	Heating water inlet	1/2" F
4	Heating water outlet	1/2" F

Dimensions (mm) and weights for UCS/H	
A	615
B	507
C	575
D	70
Kg	39

UCS900

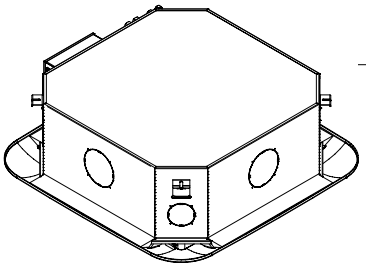

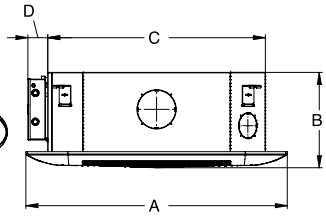

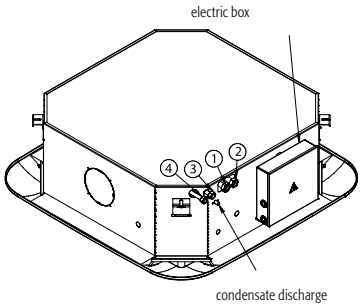

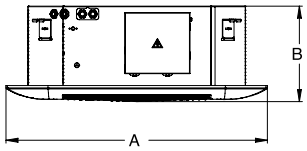

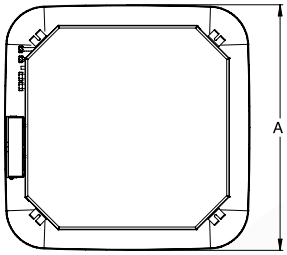

	2 pipes installation	
1	Water inlet	3/4" F
2	Water outlet	3/4" F

	4 pipes installation	
1	Cooling water inlet	3/4" F
2	Cooling water outlet	3/4" F
3	Heating water inlet	1/2" F
4	Heating water outlet	1/2" F

Dimensions (mm) and weights for UCS 900	
A	985
B	360
C	820
D	75
Kg	45

GENERAL FEATURES

The **main structure** is made of galvanised steel, completely insulated inside with closed cell thermal insulation material.
On three of the four sides, there are prearranged holes for the connection to an air supply duct.
Furthermore, there is a prearranged hole for the connection to an external air intake.
The relevant collars for an easy connection to the air duct are always supplied as standard.

The finned **heat exchangers** are made of copper pipes and surface treated aluminium fins.
The surface treatment on the fins permits to have a better condensing water discharge from the fins themselves and a perfect air passage through the heat exchanger, with reduced pressure drops and a high dehumidification and efficiency of the coil.
2 and 3 row coils are available (for UCS900 only 3 row coils). Water connections have diameter ¾" G female on the cooling coil and diameter ½" G female on the heating coil (4 pipe system).

The **fan deck**, installed in central position, is composed by a centrifugal fan and plastic impeller.

The **electric panel** (QEC00) consists of a galvanized metal box, which contains the terminal board for the electrical connections, the earth protection terminal, the autotransformer and the capacitor.
The electric panel is located on the side of the unit, at the same side of the water connections.

UCS EURAPO Cassette units (except UCS/H) are supplied with a built-in **condensate pump** having a no-return valve on the outlet.
The pump is activated by a floating switch and a second switch is used for closing the cooling valve in case of too high water level in the condensate tray, due to some problems in the water evacuation system.

The **air filter** is composed by a metal frame on which a polypropylene fibre is fixed. It can be easily removed thanks to two textile tongues fixed on its frame.
The filter is immediately accessible by removing the external air intake grill.

The **air intake grill** is realized in heat-resistant ABS plastic material*, white colour, with a very discreet design, covering the air outlet flaps.
This particular combination of air intake and air outlet grilles avoids having direct air flow against the people in the room.
A perfect internal insulation with closed-cell insulating material guarantees not to have problems of water condensation on the grilles.

The **air outlet plenum** is made by heat-resistant ABS plastic material* in white colour.
It permits to distribute the air on the 4 sides of the unit.
On each side of the cassette unit there are white flaps which can be totally closed on one or two (max.) sides of the unit, particularly used in case of an air discharge into an adjacent room.
The air intake grill is fixed by pressing the pins on the four angles into the air supply plenum: this very easy operation of fixing and removing the grill facilitates all installation and maintenance operations.

** For UCS/M model, the micro-drilled intake grill and the diffusion frame are made in painted metal sheet.*

ACCESSORIES

KREL

Electric heater
Stainless steel 1,5 kW or 3 kW (UCS900) electric heater supplied with 2 safety thermostats, one with automatic resetting and the other one with manual resetting and a power relay card (QEC20). When the electric heater is installed, the cassette unit is internally insulated with heat resistant insulating material.

Valves and shut-off valves

3 way factory fitted valves, 230V or 24V, ON/OFF or modulating type.
Shut-off valves and relevant hydraulic kit together with the auxiliary condensate drain pan are supplied loose.

GAM

Bigger grill
Grills with bigger frame dimensions (680x680 mm). When it is necessary to cover a bigger opening on the false-ceiling.

EXTRA RAL

Special painting colour of the grill, available in all RAL range.

CONTROLS

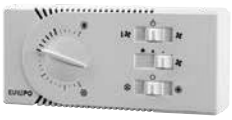

CMR00

Remote room temperature thermostat, suitable for the selection of the main functions of the unit: type of ventilation, fan speed selection, Summer/Winter switch and room temperature control.

EDCR

Remote microprocessor control, for "on wall" installation, designed for water terminal units equipped with Brushless motors (EST Inverter Technology).
It permits to control the type of ventilation, the fan speeds, Summer/Winter switch and room temperature thermostat.

ONU11
OC514

Omnibus card + Infrared receiver
Infrared receiver built-in the suction grill.
It is possible to regulate the Cassette unit through the remote control (OIR30).

OIR30

Infrared remote control
LCD display for the visualisation of the main working parameters.
Buttons for setting the main working parameters (Fan speed, Fan mode, Setpoint , etc.).

OC736

Analogue Plus Console
Elegant and simple console for the setting of the temperature set point, the functioning of the fancoil unit, the S/W changeover and the speed selection.
Compatible with the Supervision System.

OC236

Console Display
An elegant device that permits to set all working parameters (set point, speed, status, etc.).
It can also be used as diagnosis instrument, thanks to the parameters visualisation and modification.
Compatible with the Supervision System.

TECHNICAL DATA UCS, UCS/M, UCS/H

TECHNICAL DATA (max speed - EST)

EST INVERTER
ENERGY SAVING TECHNOLOGY

		2 pipes		4 pipes	
		221	232	421	432
Cooling Air temperature 27 °C d.b., 19 °C w.b. Water temperature 7/12 °C	**Total cooling capacity [kW]**	2,75	4,96	1,96	4,01
	Sensible cooling capacity [kW]	2,12	3,73	1,76	3,35
	Water flow [l/h]	472	851	336	688
	Pressure drop [kPa]	9,80	21,20	8,80	28,00
Heating 2 pipes Air temperature 20 °C Inlet water temperature 50 °C	**Heating capacity [kW]**	3,55	5,74		
	Water flow [l/h]	Values as Cooling, accordingly to the EUROVENT Standards and UNI ENV 1397 Norm			
	Pressure drop [kPa]	8,50	19,10		
Heating Air temperature 20 °C Water temperature 70/60 °C	**Heating capacity [kW]**	6,04	9,61	2,21	3,96
	Water flow [[l/h]	531	844	194	348
	Pressure drop [kPa]	10,20	18,20	7,20	27,00
Further data	**Air flow [m³/h]**	702	840	702	840
	Sound power level [db(A)]	57	60	57	60
	Sound pressure level [db(A)] (1)	47	51	47	51
	Power input [W](2)	40	63	40	63
	Absorbed current [A](2)	0,37	0,55	0,37	0,55
	Water content [l]	1,34	2,12	1,34	2,12
				(0,3)(3)	(0,3)(3)

TECHNICAL DATA (max speed - asynchronous)

		2 pipes			4 pipes		
		221	231	232	421	431	432
Cooling Air temperature 27 °C b.s., 19 °C w.b. Water temperature 7/12 °C	**Total cooling capacity [kW]**	2,52	3,57	4,79	1,60	2,93	3,86
	Sensible cooling capacity [kW]	1,94	2,80	3,57	1,50	2,39	3,26
	Water flow [l/h]	432	613	822	275	503	662
	Pressure drop[kPa]	8,10	10,40	20,10	14,30	16,60	26,10
Heating 2 pipes Air temperature 20 °C Inlet water temperature 50 °C	**Heating capacity [kW]**	3,28	4,17	5,50			
	Water flow [l/h]	Valori uguali a Raffreddamento, come da specifiche EUROVENT e norme UNI ENV 1397					
	Pressure drop [kPa]	6,80	8,10	18,20			
Heating Air temperature 20 °C Water temperature 70/60 °C	**Heating capacity [kW]**	5,83	7,14	9,44	2,63	3,13	3,83
	Water flow [[l/h]	512	627	829	231	275	336
	Pressure drop [kPa]	8,90	8,10	17,80	10,20	16,90	25,50
Further data	**Air flow [m³/h]**	565	565	770	565	565	770
	Sound power level [db(A)]	51	51	59	54	53	61
	Sound pressure level [db(A)] (1)	41	41	49	44	43	51
	Power input [W] (2)	53	52	90	53	52	79
	Absorbed current [A] (2)	0,25	0,24	0,43	0,25	0,24	0,38
	Water content [l]	1,34	2,12	2,12	1,34	2,12	2,12
					(0,3)(3)	(0,3)(3)	(0,3)(3)

(1) Sound pressure level in a 100 m³ room, 1.5 m distance and reverberating time of 0.3 s.
(2) Electrical supply: 230-1-50 [V-ph-Hz].
(3) Additional row.

EUROVENT CERTIFIED PERFORMANCE Eurapo take part in EUROVENT certification program. Above mentioned models are in the FC section of the website.

For conditions different from standard ones, please use the selection software or contact EURAPO staff.

The printed data could be modified without any notice.

TECHNICAL DATA UCS900

TECHNICAL DATA (max speed - EST)

ENERGY SAVING TECHNOLOGY

		2 pipes	4 pipes
		922	**942**
Cooling Air temperature 27 °C b.s., 19 °C w.b. Water temperature 7/12 °C	**Total cooling capacity[kW]**	10,37	9,40
	Sensible cooling capacity [kW]	7,59	7,10
	Water flow [l/h]	1779	1613
	Pressure drop [kPa]	26,10	33,00
Heating 2 pipes Air temperature 20 °C Inlet water temperature 50 °C	**Heating capacity[kW]**	12,82	
	Water flow [l/h]	Values as Cooling, accordingly to the EUROVENT Standards and UNI ENV 1397 Norm	
	Pressure drop [kPa]	24,20	
Heating Air temperature 20 °C Water temperature 70/60 °C	**Heating capacity [kW]**	21,61	8,65
	Water flow [[l/h]	1898	760
	Pressure drop [kPa]	26,00	39,40
Further data	**Air flow [m³/h]**	1550	1550
	Sound power level [db(A)]	60	60
	Sound pressure level [db(A)](1)	50	50
	Power input [W](2)	119	119
	Absorbed current [A](2)	0,94	0,94
	Water content [l]	4,22	4,26
			(0,6)(3)

TECHNICAL DATA (max speed - asynchronous)

		2 pipes		4 pipes	
		921	**922**	**941**	**942**
Cooling Air temperature 27 °C b.s., 19 °C w.b. Water temperature 7/12 °C	**Total cooling capacity [kW]**	8,76	10,15	7,62	9,20
	Sensible cooling capacity [kW]	6,81	7,80	6,11	7,62
	Water flow [l/h]	1507	1853	1460	1781
	Pressure drop [kPa]	18,0	26,0	23,2	32,0
Heating 2 pipes Air temperature 20 °C Inlet water temperature 50 °C	**Heating capacity [kW]**	10,43	11,74		
	Water flow [l/h]	Values as Cooling, accordingly to the EUROVENT Standards and UNI ENV 1397 Norm			
	Pressure drop [kPa]	19,3	22,0		
Heating Air temperature 20 °C Water temperature 70/60 °C	**Heating capacity [kW]**	18,40	23,16	7,53	8,86
	Water flow [[l/h]	1608	2025	658	774
	Pressure drop [kPa]	16,1	24,3	19,0	40,9
Further data	**Air flow [m³/h]**	1270	1670	1270	1670
	Sound power level [db(A)]	54	61	54	63
	Sound pressure level [db(A)](1)	45	52	45	53
	Power input [W](2)	130	164	130	164
	Absorbed current [A](2)	0,59	0,72	0,59	0,72
	Water content [l]	4,22	4,22	4,26	4,26
				(0,6)(3)	(0,6)(3)

(1) Sound pressure level in a 100 m³ room, 1.5 m distance and reverberating time of 0.3 s.
(2) Electrical supply: 230-1-50 [V-ph-Hz].
(3) Additional row.

Eurapo take part in EUROVENT certification program. Above mentioned models are in the FC section of the website.

For conditions different from standard ones, please use the selection software or contact EURAPO staff.

The printed data could be modified without any notice.

Eurapo Srl
Via A. Malignani, 12
33170 Pordenone - Italy
T +39 0434 572552
F +39 0434 28667
info@eurapo.it
www.eurapo.it

carecom.it

IDEATO, PROGETTATO E REALIZZATO IN ITALIA
CREATED, DESIGNED AND PRODUCED IN ITALY

QUALITÀ CERTIFICATA LABORATORI EURAPO - CERTIFIED QUALITY EURAPO LABORATORIES

EUROVENT CERTIFIED PERFORMANCE
www.eurovent-certification.com

www.eurovent-certification.com
www.certiflash.com

6DC0202 - EN1400